Problem 6.12

(Difficulty 3)

6.12 Determine the height H (m) and the pressure p (kPa) for the water flow in the system shown in the figure.

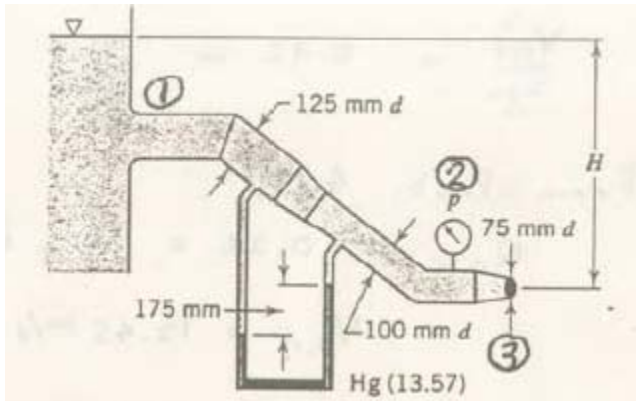

Find: The manometer reading and the pressure

Assumption: The flow is steady, incompressible, uniform, and frictionless.

Solution: Apply the continuity and Bernoulli equations to find the pressure

The continuity equation is:

$$Q = V_1 A_1 = V_2 A_2$$

The Bernoulli equation along a streamline is

$$\frac{p}{\rho} + \frac{V^2}{2} + gz = constant$$

From the continuity equation we have:

$$Q = V_1 A_1 = V_2 A_2 = V_3 A_3$$

$$\frac{V_1^2}{V_3^2} = \frac{A_3^2}{A_1^2} = \frac{D_3^4}{D_1^4}$$

$$\frac{V_2^2}{V_3^2} = \frac{A_3^2}{A_2^2} = \frac{D_3^4}{D_2^4}$$

The hydrostatic pressure is determined from the manometer reading:

$$p_1 + \gamma_{H_2o} z_1 = p_2 + \gamma_{H_2o}(z_2 - 0.175) + \gamma_{Hg}(0.175)$$

$$\left(\frac{p_1}{\gamma_{H_2o}}+z_1\right)-\left(\frac{p_2}{\gamma_{H_2o}}+z_2\right)=-0.175+\frac{\gamma_{Hg}}{\gamma_{H_2o}}(0.175)$$

Appling the Bernoulli equation between points 1 and 2 as:

$$\frac{p_1}{\rho_{H_2o}}+gz_1+\frac{1}{2}V_1^2=\frac{p_2}{\rho_{H_2o}}+gz_2+\frac{1}{2}V_2^2$$
$$\frac{p_1}{\gamma_{H_2o}}+z_1+\frac{1}{2g}V_1^2=\frac{p_2}{\gamma_{H_2o}}+z_2+\frac{1}{2g}V_2^2$$

Or

$$\left(\frac{p_1}{\gamma_{H_2o}}+z_1\right)-\left(\frac{p_2}{\gamma_{H_2o}}+z_2\right)=\frac{V_2^2}{2g}-\frac{V_1^2}{2g}=\left(\frac{D_3^4}{D_2^4}-\frac{D_3^4}{D_1^4}\right)\frac{V_3^2}{2g}$$

Combining the equations we have:

$$\left(\frac{D_3^4}{D_2^4}-\frac{D_3^4}{D_1^4}\right)\frac{V_3^2}{2g}=-0.175+\frac{\gamma_{Hg}}{\gamma_{H_2o}}(0.175)$$

$$\frac{\gamma_{Hg}}{\gamma_{H_2o}}=13.57$$

$$\frac{V_3^2}{2g}=\frac{-0.175\ m+13.57\times(0.175\ m)}{\left(\frac{(0.075\ m)^4}{(0.1\ m)^4}-\frac{(0.075\ m)^4}{(0.125\ m)^4}\right)}=11.78\ m$$

Appling the Bernoulli equation from the water surface to the out let we have:

$$H=\frac{V_3^2}{2g}=11.78\ m$$

Appling the Bernoulli equation from section 2 to section 3

$$\frac{p_2}{\gamma_{H_2o}}+\frac{V_2^2}{2g}=\frac{V_3^2}{2g}$$

$$\frac{p_2}{\gamma_{H_2o}}=\frac{V_3^2}{2g}\left(1-\frac{D_3^4}{D_2^4}\right)$$

Thus the pressure at location 2 is

$$p_2=\frac{\gamma_{H_2o}V_3^2}{2g}\left(1-\frac{D_3^4}{D_2^4}\right)$$

$$p_2=9810\ \frac{N}{m^3}\times 11.78\ m\times\left(1-\frac{(0.075\ m)^4}{(0.1\ m)^4}\right)=78.9\ kPa$$

Problem 6.13

(Difficulty 2)

6.13 Water flows in a pipeline. At a point in the line where the diameter is 7 in, the velocity is 12 $\frac{ft}{s}$ and the pressure is 50 psi. At a point 40 ft away the diameter reduces to 3 in. Calculate the pressure here when the pipe is (a) horizontal, and (b) vertical with flow downward, and (c) vertical with the flow upward. Explain why there is a difference in the pressure for the different situations.

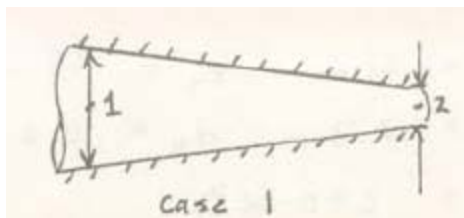

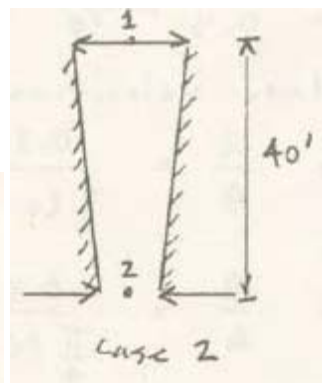

Find: Calculate the pressure p_2.

Assumption: The flow is steady, incompressible, uniform, and frictionless.

Solution: Apply the continuity and Bernoulli equations to find the pressure

The continuity equation is:

$$Q = V_1 A_1 = V_2 A_2$$

The Bernoulli equation along a streamline is

$$\frac{p}{\rho} + \frac{V^2}{2} + gz = constant$$

The velocity is the same for each orientation and is calculated using the continuity equation. The flow areas are:

$$A_1 = \frac{\pi D_1^2}{4}$$

$$A_2 = \frac{\pi D_2^2}{4}$$

The velocity V_2 is

$$V_2 = \frac{V_1 A_1}{A_2} = \frac{V_1 D_1^2}{D_2^2} = \frac{12\ \frac{ft}{s} \times \left(\frac{7}{12}\ ft\right)^2}{\left(\frac{3}{12}\ ft\right)^2} = 65.3\ \frac{ft}{s}$$

(a) For the horizontal pipe, the height cancels out. The Bernoulli equation along the center streamline is:

$$\frac{p_1}{\rho} + \frac{V_1^2}{2} = \frac{p_2}{\rho} + \frac{V_2^2}{2}$$

The inlet pressure is

$$p_1 = 50\ psi = 7200\ \frac{lbf}{ft^2}$$

$$\rho = 1.938\ \frac{slug}{ft^3} = 1.938\ \frac{lbf \cdot s^2}{ft^4}$$

So the pressure is computed as:

$$p_2 = p_1 + \frac{\rho}{2}(V_1^2 - V_2^2)$$

$$p_2 = 7200\ \frac{lbf}{ft^2} + \frac{1.938\ \frac{lbf \cdot s^2}{ft^4}}{2} \times \left(\left(12\ \frac{ft}{s}\right)^2 - \left(65.3\ \frac{ft}{s}\right)^2\right) = 3208\ \frac{lbf}{ft^2} = 22.3\ psi$$

(b) For the vertical pipe with the flow downward, we have for the Bernoulli equation:

$$\frac{p_1}{\rho} + \frac{V_1^2}{2} + gz_1 = \frac{p_2}{\rho} + \frac{V_2^2}{2} + gz_2$$

$$p_2 = p_1 + \frac{\rho}{2}(V_1^2 - V_2^2) + \rho g(z_1 - z_2)$$

Using the same values for velocity and pressure p_1 as for the horizontal situation, we have the additional pressure due to the height difference

$$p_2 = 3208\ \frac{lbf}{ft^2} + \rho g(z_1 - z_2) = 3208\ \frac{lbf}{ft^2} + 1.938\ \frac{lbf \cdot s^2}{ft^4} \times 32.2\ \frac{ft}{s^2} \times (40 - 0)ft$$

$$p_2 = 5704\ \frac{lbf}{ft^2} = 39.6\ psi$$

(c) For the vertical pipe with the flow upward, we have for the Bernoulli equation, where the flow is now from 2 to 1:

$$\frac{p_2}{\rho} + \frac{V_2^2}{2} + gz_2 = \frac{p_1}{\rho} + \frac{V_1^2}{2} + gz_1$$

The pressure at the small end (2) is then

$$p_2 = p_1 + \frac{\rho}{2}(V_1^2 - V_2^2) + \rho g(z_1 - z_2)$$

Using the same values for velocity and pressure p_1 as for the horizontal situation, we have

$$p_2 = 3208\ \frac{lbf}{ft^2} + \rho g(z_1 - z_2) = 3208\ \frac{lbf}{ft^2} + 1.938\ \frac{lbf \cdot s^2}{ft^4} \times 32.2\ \frac{ft}{s^2} \times (40 - 0)ft$$

$$p_2 = 5704\ \frac{lbf}{ft^2} = 39.6\ psi$$

which is the same as for the flow downward.

The pressures for the vertical orientation are greater than for the horizontal orientation due to the hydrostatic pressure. The pressures for the vertical directions are the same since the hydrostatic pressure difference is the same regardless of flow direction.

Problem 6.14

(Difficulty 2)

6.14 Determine the relation between A_1 and A_2 so that for a flow rate of 0:28 m^3/s the static pressure will be the same at sections 1 and 2. Determine the manometer reading for this condition and state which leg has the higher mercury column.

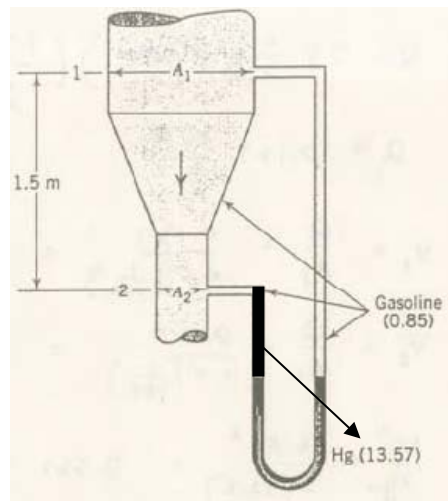

Assumption: The flow is steady and incompressible

Solution: Use the continuity and Bernoulli equations together with manometer relations to find the height of the mercury column.

From the continuity equation:

$$Q = V_1 A_1 = V_2 A_2$$

Appling the Bernoulli equation from section 1 to section 2 we have:

$$\frac{p_1}{\rho_{gas}} + gz_1 + \frac{1}{2}V_1^2 = \frac{p_2}{\rho_{gas}} + gz_2 + \frac{1}{2}V_2^2$$

We also have the pressures at location 1 and 2 as specified as equal:

$$p_1 = p_2$$

From the Bernoulli equation

$$\frac{1}{2}V_1^2 - \frac{1}{2}V_2^2 = g(z_2 - z_1)$$

Using the continuity equation to replace the velocities with the volume flow rate and areas

$$V_1^2 - V_2^2 = \frac{Q^2}{A_1^2} - \frac{Q^2}{A_2^2} = 2g(z_2 - z_1)$$

The relation between the areas is then

$$\frac{1}{A_1^2} - \frac{1}{A_2^2} = \frac{2g(z_2 - z_1)}{Q^2} = \frac{2 \times 9.81\ \frac{m}{s^2} \times (-1.5\ m)}{\left(0.28\ \frac{m^3}{s}\right)^2} = -375\ \frac{1}{m^4}$$

For the static pressure equation of the manometer we have:

$$p_1 + \gamma_{gas}(1.5 + h) = p_2 + \gamma_{Hg} h$$

$$\gamma_{gas}(1.5 + h) = \gamma_{Hg} h$$

$$h = \frac{\gamma_{gas} \times 1.5\ m}{\gamma_{Hg} - \gamma_{gas}} = \frac{0.85 \times 1.5\ m}{13.57 - 0.85} = 0.1002\ m = 100.2\ mm$$

The mercury column is higher in the left hand leg of the manometer.

Problem 6.16

[Difficulty: 3]

6.16 The water flow rate through the siphon is 5 L/s, its temperature is 20°C, and the pipe diameter is 25 mm. Compute the maximum allowable height, h, so that the pressure at point A is above the vapor pressure of the water. (Assume the flow is frictionless.)

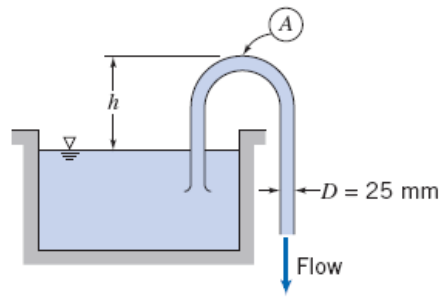

Given: Flow rate through siphon

Find: Maximum height h to avoid cavitation

Solution:

Basic equation $\frac{p}{\rho} + \frac{V^2}{2} + g \cdot z = \text{const}$ $\qquad Q = V \cdot A$

Assumptions: 1) Incompressible flow 2) Inviscid 3) Steady 4) Along a streamline

Available data $Q = 5 \cdot \frac{L}{s}$ $\quad Q = 5 \times 10^{-3} \frac{m^3}{s}$ $\quad D = 25 \cdot mm$ $\quad \rho = 999 \cdot \frac{kg}{m^3}$ $\quad p_{atm} = 101 \cdot kPa$

From continuity $V = \frac{Q}{A} = \frac{4 \cdot Q}{\pi \cdot D^2}$ $\qquad V = \frac{4}{\pi} \times 0.005 \frac{m^3}{s} \times \left(\frac{1}{.025 \cdot m}\right)^2$ $\qquad V = 10.2 \frac{m}{s}$

Hence, applying Bernoulli between the free surface and point A

$$\frac{p_{atm}}{\rho} = \frac{p_A}{\rho} + g \cdot h + \frac{V^2}{2}$$

where we assume $V_{Surface} <<$

Hence $p_A = p_{atm} - \rho \cdot g \cdot h - \rho \cdot \frac{V^2}{2}$

From the steam tables, at 20°C the vapor pressure is $p_v = 2.358 \cdot kPa$

This is the lowest permissible value of p_A

Hence $p_A = p_v = p_{atm} - \rho \cdot g \cdot h - \rho \cdot \frac{V^2}{2}$ or $h = \frac{p_{atm} - p_v}{\rho \cdot g} - \frac{V^2}{2 \cdot g}$

Hence $h = (101 - 2.358) \times 10^3 \cdot \frac{N}{m^2} \times \frac{1}{999} \cdot \frac{m^3}{kg} \times \frac{s^2}{9.81 \cdot m} \times \frac{kg \cdot m}{N \cdot s^2} - \frac{1}{2} \times \left(10.2 \frac{m}{s}\right)^2 \times \frac{s^2}{9.81 \cdot m}$ $\qquad h = 4.76\,m$

Problem 6.17 [Difficulty: 2]

6.17 Water flows from a very large tank through a 5-cm-diameter tube. The dark liquid in the manometer is mercury. Estimate the velocity in the pipe and the rate of discharge from the tank. (Assume the flow is frictionless.)

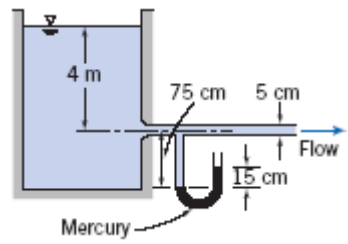

Given: Flow through tank-pipe system

Find: Velocity in pipe; Rate of discharge

Solution:

Basic equations $\frac{p}{\rho} + \frac{V^2}{2} + g \cdot z = \text{const}$ $\Delta p = \rho \cdot g \cdot \Delta h$ $Q = V \cdot A$

Assumptions: 1) Incompressible flow 2) Inviscid 3) Steady 4) Along a streamline

Hence, applying Bernoulli between the free surface and the manometer location

$$\frac{p_{atm}}{\rho} = \frac{p}{\rho} - g \cdot H + \frac{V^2}{2}$$

where we assume $V_{Surface} <<$, and $H = 4$ m

Hence $p = p_{atm} + \rho \cdot g \cdot H - \rho \cdot \frac{V^2}{2}$

For the manometer $p - p_{atm} = SG_{Hg} \cdot \rho \cdot g \cdot h_2 - \rho \cdot g \cdot h_1$

Note that we have water on one side and mercury on the other of the manometer

Combining equations $\rho \cdot g \cdot H - \rho \cdot \frac{V^2}{2} = SG_{Hg} \cdot \rho \cdot g \cdot h_2 - \rho \cdot g \cdot h_1$ or $V = \sqrt{2 \cdot g \cdot \left(H - SG_{Hg} \cdot h_2 + h_2\right)}$

Hence $V = \sqrt{2 \times 9.81 \cdot \frac{m}{s^2} \times (4 - 13.6 \times 0.15 + 0.75) \cdot m}$ $V = 7.29 \frac{m}{s}$

The flow rate is $Q = V \cdot \frac{\pi \cdot D^2}{4}$ $Q = \frac{\pi}{4} \times 7.29 \cdot \frac{m}{s} \times (0.05 \cdot m)^2$ $Q = 0.0143 \frac{m^3}{s}$

Problem 8.1

(Difficulty: 2)

8.1 For incompressible flow in a circular tube, derive expressions for Reynolds number in terms of (a) volume flow rate and tube diameter and (b) mass flow rate and tube diameter.

Assumptions: steady, incompressible flow

Solution: Use the continuity equation and the basic definitions:

$$Re = \frac{\rho D \vec{V}}{\mu}$$

$$Q = A\vec{V}$$

$$\dot{m} = \rho A \vec{V}$$

$$A = \frac{\pi D^2}{4}$$

Then

$$Re = \frac{\rho D \vec{V}}{\mu} = \frac{\rho D}{\mu}\frac{Q}{A} = \frac{4\rho D}{\mu}\frac{Q}{\pi D^2} = \frac{4\rho Q}{\mu \pi D} = \frac{4Q}{\upsilon \pi D}$$

Also

$$Re = \frac{D}{\mu}\frac{\rho \vec{V} A}{A} = \frac{4D}{\mu}\frac{\dot{m}}{\pi D^2} = \frac{4\dot{m}}{\pi \mu D}$$

We have the following equation from above:

$$Q = \frac{\upsilon \pi D Re}{4}$$

For the same flow rate in section with different channel diameter,

$$D_1 Re_1 = D_2 Re_2$$

$$Re_2 = \frac{D_1}{D_2} Re_1 = \frac{10\ mm}{6\ mm} \times 1800 = 3000$$

Problem 8.2

(Difficulty 2)

8.2 Determine the maximum flow rate of air at laminar conditions in a 4-in.-diameter pipe at an absolute pressure of 30 psia and 100°F. Determine the maximum flow rate when (a) the pressure is raised to 60 psia, and (b) the temperature is raised to 200°F. Describe the reason for the differences in flow rates in terms of the physical mechanisms involved.

Find: The maximum flow rate for laminar flow.

Assumption: Air behaves as an ideal gas

Solution: The basic equations are the definition of Reynolds number, the continuity expression, and the ideal gas law

$$Re = \frac{V\rho D}{\mu} = \frac{VD}{\nu}$$

$$m = \dot{\rho}\, A\, V$$

$$\rho = \frac{p}{RT}$$

We have

$$p = 30\ psia = 4320\ \frac{lbf}{ft^2}$$

$$R = 1716\ \frac{lbf \cdot ft}{slug \cdot °R}$$

$$T = 100\ °\text{F} = 560\ °R$$

Thus the density is

$$\rho = \frac{p}{RT} = \frac{4320\ \frac{lbf}{ft^2}}{1716\ \frac{lbf \cdot ft}{slug \cdot °R} \times 560\ °R} = 0.0045\ \frac{slug}{ft^3} = 0.0045\ \frac{lbf \cdot s^2}{ft^4}$$

For the maximum laminar flow we have the Reynolds number at the critical value:

$$Re_{crit} = 2300$$

For this situation

$$D = 4\ in$$

$$\mu = 3.94 \times 10^{-7}\ \frac{lbf \cdot s}{ft^2}$$

The maximum velocity is then:

$$V = \frac{\mu Re}{\rho D} = \frac{3.94 \times 10^{-7}\ \frac{lbf \cdot s}{ft^2} \times 2300}{\left(\frac{4}{12}\ ft\right) \times 0.0045\ \frac{lbf \cdot s^2}{ft^4}} = 0.605\ \frac{ft}{s}$$

The cross section area is:

$$A = \frac{\pi D^2}{4} = \frac{\pi \times \left(\frac{4}{12}\ ft\right)^2}{4} = 0.0873\ ft^2$$

The maximum flow rate:

$$\dot{m} = \rho V A = 0.0045\ \frac{slug}{ft^3} \times 0.605\ \frac{ft}{s} \times 0.0873\ ft^2 = 2.38 \times 10^{-4}\ \frac{slug}{s}$$

If the pressure is raised up to 60 $psi = 8640\ \frac{lbf}{ft^2}$, the density of the air will become:

$$\rho = \frac{8640\ \frac{lbf}{ft^2}}{1716\ \frac{lbf \cdot ft}{slug \cdot °R} \times 560\ °R} = 0.009\ \frac{slug}{ft^3} = 0.009\ \frac{lbf \cdot s^2}{ft^4}$$

The maximum velocity in this case is:

$$V = \frac{\mu Re}{\rho D} = \frac{3.94 \times 10^{-7}\ \frac{lbf \cdot s}{ft^2} \times 2300}{\left(\frac{4}{12}\ ft\right) \times 0.009\ \frac{lbf \cdot s^2}{ft^4}} = 0.302\ \frac{ft}{s}$$

And the maximum flow rate:

$$\dot{m} = \rho V A = 0.009\ \frac{slug}{ft^3} \times 0.302\ \frac{ft}{s} \times 0.0873\ ft^2 = 2.38 \times 10^{-4}\ \frac{slug}{s}$$

The maximum flow rate is the same. The reason is that the density cancels out of the flow rate using Reynolds number:

$$\dot{m} = \rho V A = \frac{\mu Re}{\rho D} \rho A = \frac{\mu Re A}{D}$$

The pressure will not change the viscosity μ (as an assumption)

When the temperature is raised to 200°F, the viscosity decreases. The density also decreases, but we have seen that this has no effect. The viscosity is

$$\mu = 4.49 \times 10^{-7}\ \frac{lbf \cdot s}{ft^2}$$

Thus the flow rate is the ratio of the previous flow rate times the ratio of viscosities

$$\dot{m} = 2.38 \times 10^{-4}\ \frac{slug}{s} \times \frac{4.49 \times 10^{-7}\ \frac{lbf \cdot s}{ft^2}}{3.94 \times 10^{-7}\ \frac{lbf \cdot s}{ft^2}} = 2.71 \times 10^{-4}\ \frac{slug}{s}$$

The reason for the increase is that the viscosity is a function of temperature.

Problem 8.14

(Difficulty 1)

8.14 Carbon dioxide flows in a 50 mm plate at a velocity of 1.5 m/s , temperature 66 °C, and absolute pressure 50 kPa. Determine whether the flow is laminar or turbulent. If the temperature is lowered to 30 °C, determine the flow regime. If the pressure is reduced to 20 kPa, determines the flow regime. Explain the differences in answers in terms of the physical mechanisms involved.

Find: Whether the flow is laminar or turbulent

Assumptions: Flow is fully developed, steady, and incompressible. Carbon dioxide is an ideal gas.

Solution: Use the Reynolds number criteria to determine the flow regime

$$Re = \frac{\rho V D}{\mu}$$

For carbon dioxide we have:

$$R = 187.8\ \frac{J}{kg \cdot K}$$

$$\mu = 1.47 \times 10^{-5}\ Pa \cdot s$$

Applying the ideal gas law we have the density:

$$\rho = \frac{p}{RT} = \frac{50\ kPa}{187.8\ \frac{J}{kg \cdot K} \times (66 + 273)\ K} = 0.79\ \frac{kg}{m^3}$$

The Reynolds number is calculated to be:

$$Re = \frac{\rho V D}{\mu} = \frac{0.79\ \frac{kg}{m^3} \times 1.5\ \frac{m}{s} \times 0.05\ m}{1.47 \times 10^{-5}\ Pa \cdot s} = 4.03 \times 10^3$$

The criteria for laminar flow is that the Reynolds number is less than 2300. The Reynolds number is greater than the value so the flow is turbulent.

When the temperature is lowered to 30 °C, we have:

$$\rho = \frac{p}{RT} = \frac{50\ kPa}{187.8\ \frac{J}{kg \cdot K} \times (30 + 273)\ K} = 0.88\ \frac{kg}{m^3}$$

The Reynolds number is calculated to be:

$$Re = \frac{\rho V D}{\mu} = \frac{0.88\ \frac{kg}{m^3} \times 1.5\ \frac{m}{s} \times 0.05\ m}{1.47 \times 10^{-5}\ Pa \cdot s} = 4.49 \times 10^3$$

The Reynolds number is greater than 2300 so the flow is turbulent.

When the pressure is decreased to $20\ kPa$ we have:

$$\rho = \frac{p}{RT} = \frac{20\ kPa}{187.8\ \frac{J}{kg \cdot K} \times (66 + 273)\ K} = 0.31\ \frac{kg}{m^3}$$

The Reynolds number is calculated to be:

$$Re = \frac{\rho V D}{\mu} = \frac{0.31\ \frac{kg}{m^3} \times 1.5\ \frac{m}{s} \times 0.05\ m}{1.47 \times 10^{-5}\ Pa \cdot s} = 1582$$

The Reynolds number is less than 2300 so the flow is laminar.

The Reynolds number of the carbon dioxide flows in a plate will increase when temperature decreases. The Reynolds number will decrease when pressure decreases. The reason is that lower temperature will increases the density and lower pressure will decrease the density for a gas.

Problem 8.16

(Difficulty 1)

8.16 Determine the largest diameter of a pipeline that may be used to carry 100 gpm of jet fuel (JP-4) at 59 °F if the flow is to be laminar.

Find: The largest diameter of the pipe

Assumptions: Flow is fully developed, steady, and incompressible.

Solution: Use the Reynolds number criteria to determine the largest diameter.

$$Re = \frac{\rho V D}{\mu}$$

For JP-4, we have:

$$SG = 0.77 \quad \text{and} \quad \mu = 1.817 \times 10^{-5}\ \frac{lbf \cdot s}{ft^2}$$

For the volumetric flow rate we have:

$$Q = 100\ gpm\ = 0.223\ \frac{ft^3}{s}$$

The velocity is:

$$V = \frac{Q}{A} = \frac{Q}{\frac{\pi}{4}D^2} = \frac{0.284}{D^2}\ \frac{ft}{s}$$

For the flow to be laminar, the maximum Reynolds number is 2300:

$$Re = \frac{\rho V D}{\mu} = \frac{\rho \frac{0.284}{D^2} D}{\mu} = 2300$$

The density is given by:

$$\rho = 1.94\ \frac{slug}{ft^3} = 1.94\ \frac{lbf \cdot s^2}{ft^4}$$

Thus the largest diameter of the pipeline is:

$$D = \frac{\rho 0.284}{2300\mu} = \frac{0.77 \times 1.94\ \frac{lbf \cdot s^2}{ft^4} \times 0.284\ \frac{ft^3}{s}}{2300 \times 1.817 \times 10^{-5}\ \frac{lbf \cdot s}{ft^2}} = 10.15\ ft$$

Problem 8.25

[Difficulty: 2]

8.80 Water flows in a horizontal constant-area pipe; the pipe

8.25 Water flows in a horizontal 75 mm diameter pipe at an average speed of 5 m/s. The pressure at the pipe inlet is 275 kPa gage and the outlet is at atmospheric pressure. Determine the head loss in the pipe. (a) Determine the inlet pressure needed to maintain the same flow rate when the pipe is aligned so that (b) the outlet is 15 m above the inlet and (c) the outlet is 15 m below the inlet. (d) Determine how much lower the outlet must be to maintain the same flow rate is maintained if the pressures at both ends of the pipe are atmospheric (i.e., gravity feed).

-

Given: Data on flow in a pipe

Find: Head loss for horizontal pipe; inlet pressure for different alignments; slope for gravity feed

Solution:

The basic equation between inlet (1) and exit (2) is $\left(\frac{p_1}{\rho} + \alpha_1 \cdot \frac{V_1^2}{2} + g \cdot z_1\right) - \left(\frac{p_2}{\rho} + \alpha_2 \cdot \frac{V_2^2}{2} + g \cdot z_2\right) = h_{lT}$ (Eq.1)

Given or available data $D = 75 \cdot mm$ $V = 5 \cdot \frac{m}{s}$ $\rho = 999 \cdot \frac{kg}{m^3}$ $\mu = 0.001 \cdot \frac{N \cdot s}{m^2}$

Horizontal pipe data $p_1 = 275 \cdot kPa$ $p_2 = 0 \cdot kPa$ (Gage pressures) $z_1 = z_2$ $V_1 = V_2$

Equation becomes $h_{lT} = \frac{p_1 - p_2}{\rho}$ $h_{lT} = 275 \cdot \frac{J}{kg}$

For an inclined pipe with the same flow rate, the head loss will be the same as above; in addition we have the following new data

$z_1 = 0 \cdot m$ $z_2 = 15 \cdot m$

Equation (1) becomes $p_1 = p_2 + \rho \cdot g \cdot (z_2 - z_1) + \rho \cdot h_{lT}$ $p_1 = 422 \cdot kPa$

For a declining pipe with the same flow rate, the head loss will be the same as above; in addition we have the following new data

$z_1 = 0 \cdot m$ $z_2 = -15 \cdot m$

Equation (1) becomes $p_1 = p_2 + \rho \cdot g \cdot (z_2 - z_1) + \rho \cdot h_{lT}$ $p_1 = 128 \cdot kPa$

For a gravity feed with the same flow rate, the head loss will be the same as above; in addition we have the following new data

$p_1 = 0 \cdot kPa$ (Gage)

Equation (1) becomes $z_2 = z_1 - \frac{h_{lT}}{g}$ $z_2 = -28.1\ m$